MOUNTING AND OPERATING INSTRUCTIONS

US Echo II

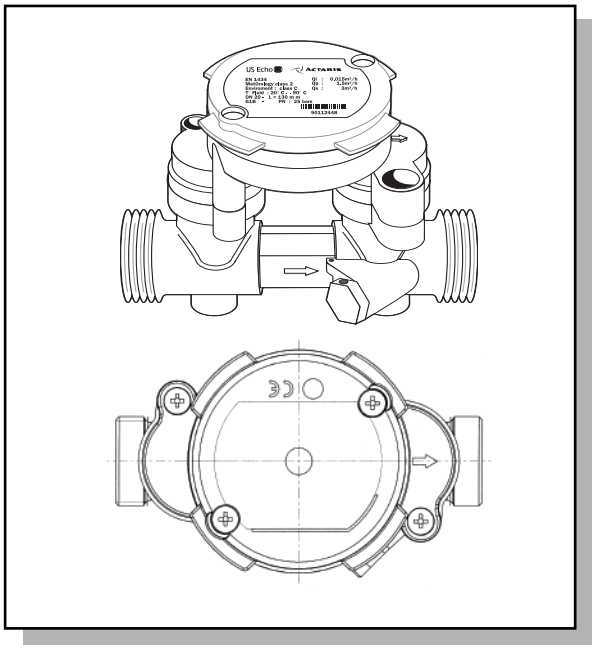

1. Delivery US Echo II:

- 1 flow meter
- 1 package with material for sealing
- 1 set of gaskets
- 1 mounting and operation instructions
- 1 package with M 10 x 1 adapters
  Direct measurement and Cu gasket
- optional: PulsBox for power supply

2. General indications

Flow meter US Echo II is a sophisticated electronic measuring instrument. The following instructions must be carefully observed in order to ensure correct mounting and to fulfill all safety and guarantee conditions.

2.1 Advise concerning safety

Hot water circuits and mains power supplies run under high temperatures and pressure as well as under high voltages. When operated incorrectly, these may cause serious injuries. Due to this, measuring units may only be installed by qualified and trained personnel. The casings of the heat meters are designed for cold, warm and hot water, with the characteristic values specified for each case, excluding any other liquid. If the integrator casing is submitted to strong shocks, impacts, drops from more than 60 cm height or similar stresses, the heat meter must be replaced. Pipes must be earthed. Before opening the meter, mains voltage (optional) must be isolated.

2.2 CE marks and protective classes

Metering unit US Echo II fulfills all requirements of EC guidelines, and is approved in environmental class C (industrial applications), according to DIN EN 1434:

- Ambient temperature: + 5°C ... +55°C (indoors installation)
- Storage temperature (without battery): -10°C ... +60 °C
- Relative atmospheric humidity: < 95 %
- absolute altitude: < 2.000 m
- Flow sensor IP 66/67
- EMC protection according to DIN EN 50081-1/2, DIN EN 50082-1/2
- Double protective insulation ⧈ (Protective Class II according to CEI 60364-4-443)
- US Echo II fulfills PED requirements (Pressure equipment directive 97/23/EG)
- Discarded electronic devices or batteries contained within the US Echo II must not be put in normal house hold waste. Dispose in accordance to local government regulations.

2.3 Further important indications

- The flow sensor must never be lifted or transported by the connecting cable!
- Mounting position shall be selected so that the connecting cable of the flow meter and the temperature probe cables will not be near mains cables or other sources of electromagnetic disturbances (minimum distance 50 cm).
- Cables must not be installed along pipes reaching temperatures above 55 °C.
- Opening of calibration seals will cause the loss of calibration validation and of guarantee, including conformity with pressure equipment directive 97/23/EG.
- The casing may only be cleaned on the outside, with a soft, damp cloth. Do not use detergents.
- Installation must be carried out according to DIN 4713 or DIN EN 1434.

3. Mounting the flow meter

3.1 Operating conditions, dimensions and materials

The operating parameters of the heating circuit must not exceed the following values:

Nominal pressure	16/25 bar (cf. nameplate)	Operating temperature	130 °C
Short term maximum temperature	150 °C		

for further technical data, refer to table:

Thread connection																
Connection	Thread after ISO 228															
Transducer materials	Stainless steel															
O-ring	EPDM															
Pipe materials	brass Cu Zn36 Pb2 AS								bronze Cu Pb5 Sn5 Zn5							
Nominal flow, q_P(Qn) m^3/h	0,6			1,5			2,5			3,5		6			10	
Max. flow, q_s m^3/h	1,2			3			5			7		12			20	
Min. flow, q_i l/h	6			15			25			35		60			100	
Startup flow l/h	1,2			3			5			7		12			20	
Build in length L1, mm	110	130	190	110	130	190	130	190	260	150	260	150	260	260	200	300
Nominal diameter	15	20	20	15	20	20	20	20	25	25	25	25	25	32	40	40
Thread connection G	G3/4B	G1B		G3/4B	G1B		G1B		G1"1/4B	G1"1/4B		G1"1/4B		G1"1/2B	G2B	
High A, mm	72	72	72	72	72	72	72	72	77	77	77	77	77	77	85	85
High A1, mm	110	110	110	110	110	110	110	110	114	114	114	114	114	114	123	123
High A2, mm	18	18	18	18	18	18	18	18	23	23	23	23	23	23	35	35
Weight, kg	1,1	1,2	1,5	1,1	1,2	1,5	1,1	1,4	1,9	1,5	1,9	2,4	2	1,8	2,5	5,5
Internal diameter di, mm	19	19	19	19	19	19	20	20	28,5	28,5	28,5	28,5	28,5	28,5	44	44
Pressure loss at q_P, bar	0,03	0,03	0,03	0,21	0,21	0,21	0,15	0,15	0,15	0,12	0,12	0,13	0,13	0,13	0,08	0,08

Flange connection													
Connection	Flanged after ISO 7005-3, PN 25												
Transducer materials	Stainless steel												
O-ring	EPDM												
Pipe materials	brass Cu Zn36 Pb2 AS			bronze Cu Pb5 Sn5 Zn5									
Nominal flow, q_P(Qn) m^3/h	0,6	1,5	2,5	3,5		6			10			15	
Max. flow, q_s m3/h	1,2	3	5	7		12			20			30	
Min. flow, q_i l/h	6	15	25	35		60			100			150	
Startup flow l/h	1,2	3	5	7		12			20			30	
Build in length L1, mm	190	190	190	260	300	260	300	270	300	250	270	270	250
Nominal diameter	20	20	20	25	40	25	40	50	40	40	50	50	50
High A, mm	72	72	72	77	77	77	77	77	85	85	85	85	85
High A1, mm	110	110	110	114	114	114	114	114	123	123	123	123	123
High A2, mm	52,5	52,5	52,5	57,5	75	57,5	75	82,5	75	75	82,5	82,5	82,5
Weight, kg	3,2	3,2	3,2	4,5	7,1	4,5	5,8	8,6	8,2	8	9	9	8,8
Flange Diameter D, mm	105	105	105	115	150	115	150	165	150	150	165	165	165
Bolt circle diameter K, mm	75	75	75	85	110	85	110	125	110	110	125	125	125
Bold holes diameter L,mm	14	14	14	14	18	14	18	18	18	18	18	18	18
Number of holes	4	4	4	4	4	4	4	4	4	4	4	4	4
Flange dimension F, mm	100	100	100	110	140	110	140	160	140	140	160	160	160
Internal diameter di, mm	19	19	20	28,5	28,5	28,5	28,5	28,5	44	44	44	44	44
Pressure loss at q_P, bar	0,03	0,21	0,15	0,12	0,12	0,13	0,13	0,13	0,08	0,08	0,08	0,16	0,16

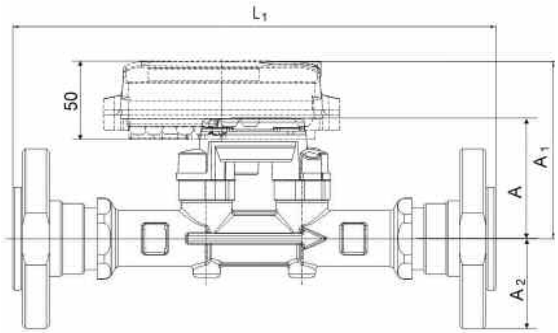

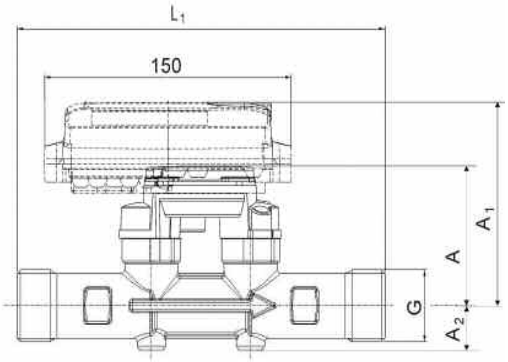

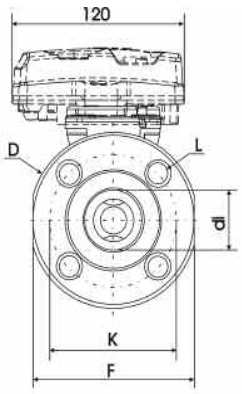

3.2 Mounting instructions:

- Never carry out welding or drilling work near the meter.
- Leave the meter in its original package until all connection, insulating, painting and cleaning tasks have been performed.
- Always install the meter according to the mounting position indicated on the nameplate (supply or return or cold or warm line).
- The flow meter may be installed horizontally or vertically, but not upside down.

- The heat meter must be protected against shocks and vibrations which might occur at the place of installation. When charging the pipes with water, isolation valves must be opened slowly.
- Thread and flange connections of the meter must match with the nominal width DN and nominal pressure PN (according to EN 1092) of the corresponding counterparts of the pipes. The metering unit must not be subject to excessive tensions caused by pipes or molded parts. The pipes of the heating system must be secularly fastened before and after the flow meter. In case of flanged connections, all bolts must be used and tightened. All bolts, nuts and gaskets used must comply

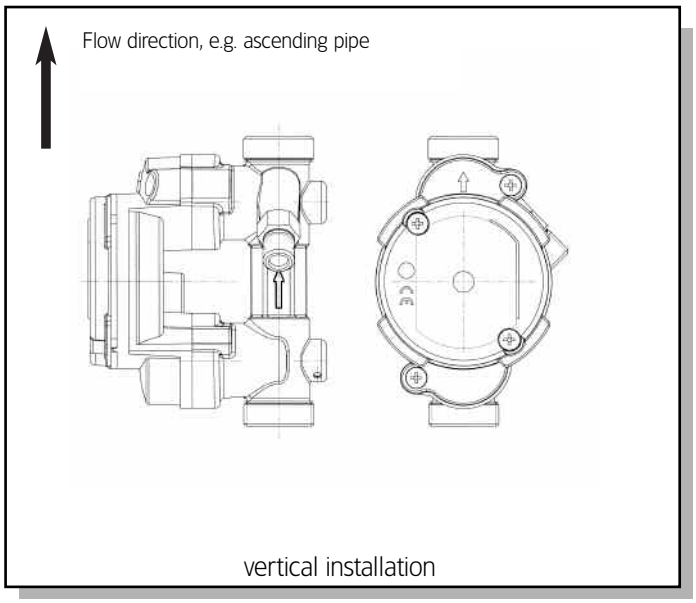

vertical installation

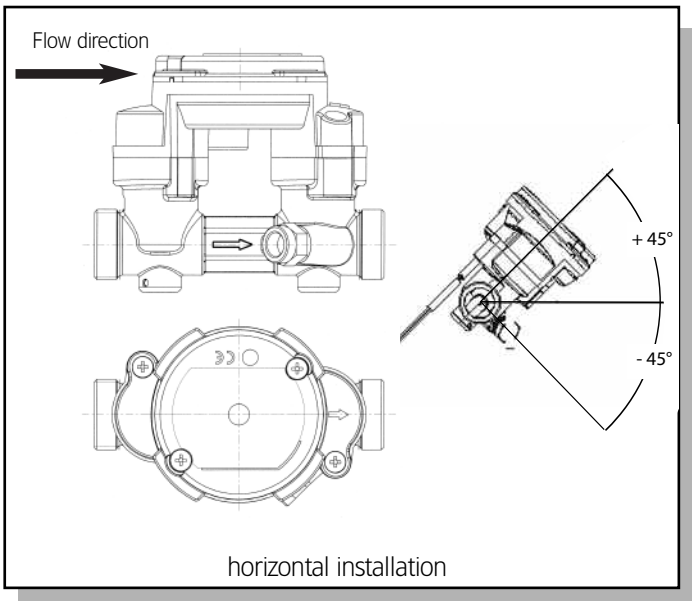

horizontal installation

4. Mounting of temperature probes for versions DN 15/DN 20

4.1 Mounting

For versions DN 15 and DN 20, a measuring point integrated within the casing may be used to install a temperature probe. Depending on the version, this is fitted at the factory with a blind plug, an immersion pocket or a M10x1 threaded plug for direct measurements. If necessary, modification of the measuring point may also be carried out on site.
Attention: before removing the blind plug, the immersion pocket or the probe for direct measurement, the flow meter must be separated from the heating circuit and hot water must be let out under control. Risk of scalding!

⚠

PS measurement in flow meter (only DN 15/20)

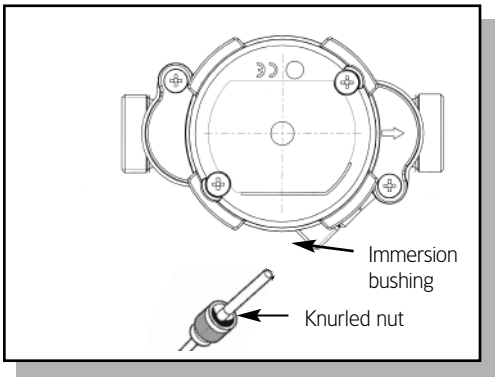

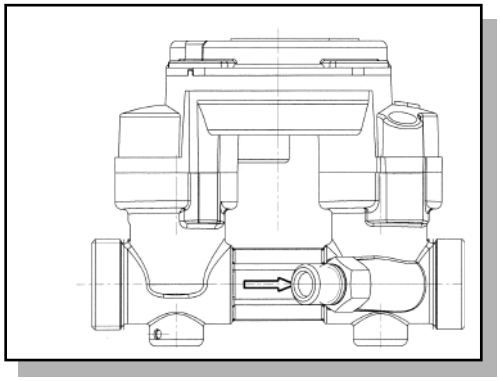

DS measurement in flow meter (only DN 15/20)

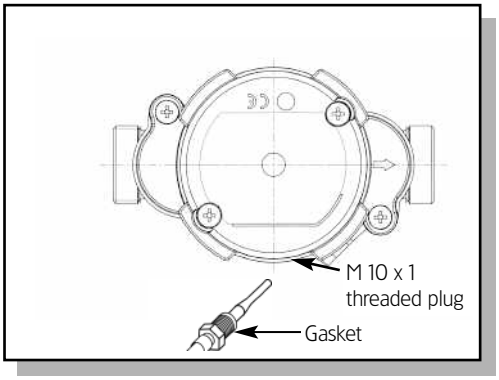

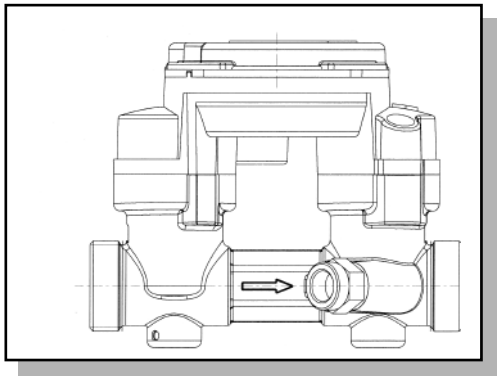

5. US Echo II – Basic version

The basic version of US Echo II must be power-supplied by the integrator or an exterior power supply. When CF 51, CF 55 or CF 800 is used, a supplementary data line will allow to transfer alarm messages to the integrator.

5.1 Connecting the flow meter to integrator unit

Before connecting, make sure the impulse weights of flow meter and integrator are equal! Connect to integrator according to the following connecting diagram
(figure shows connecting diagram for CF 51 and CF 55).

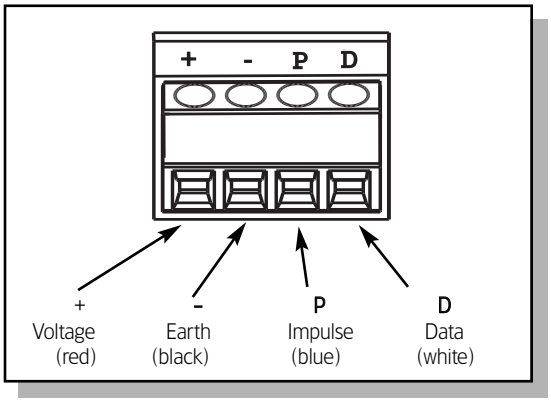

5.1.1. Specification of integrator connection interface

4 wire connecting cable, ∅ 4.2 mm, allocation of wire colors:

- Red — power supply US Echo II
- Black — earth connection (–)
- Blue — volume impulse (P)
- White — data connection (D)

5.2. Characteristic of impulse output

- Version: Open collector
- Polarity: non reversible (observe connection diagram)
- Duration of impulse: 5.5 ms ±0.5 ms
- Max. input voltage: 30V DC
- Max. input current: 27 mA
- Drop of voltage when switched on: ≤ 0.3 V at 0.1 mA/≤ 2V at 27 mA
- Resistance when switched off: ≥ 6 M Ω
- Max. impulse frequency 1,1 x Qs/impulse weight

5.2.1. Power supply

- Nominal voltage: 3.2...8V DC
- Average current consumption: 35μA
- Peak current consumption Imax: 2.5 mA

5.3 Function control and startup

5.3.1 Function control of US Echo II

US Echo II is fitted with a light emitting diode (LED) to assure simple control of the flow meter. The flashing sequence of this diode depends on the operating status.
Flashing sequence (repeated every 10 s):

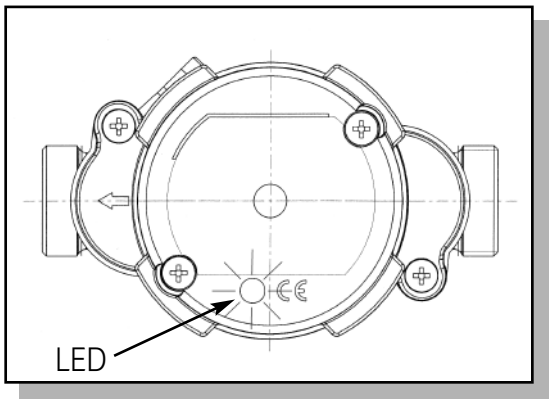

- 1 flash: there is a flow
- 2 flashes: air in the meter
- 3 flashes: impurity alarm (cleaning required)
- 4 flashes: wrong flow direction
- 5 flashes: maximum flow exceeded (Q > 1.1 x Qs)
- LED permanently lit: non admissible configuration (contact service)

5.3.2. Function control of integrator

A function and a plausibility control are performed on the base of the flow and volume displays according to the mounting and operating instructions of the integrator.

5.3.3. Start up

Once function was successfully controlled, US Echo II is ready for start up and for technical reception.

6. US Echo II – Special versions with PulsBox

The PulsBox offers the following functions:

- Power supply of US Echo II independently of the integrator.
- Galvanic isolation of US Echo II from the integrator (allows for longer cables).
- Pulse length increase of US Echo II pulses

6.1. Connecting the flow meter with PulsBox to integrator

Before connecting, make sure that the impulse weights of flow meter and integrator agree!
Connection of the flow meter with PulsBox to the integrator according to integrator mounting instructions. Observe polarity !

6.2. Specification of integrator connection interface

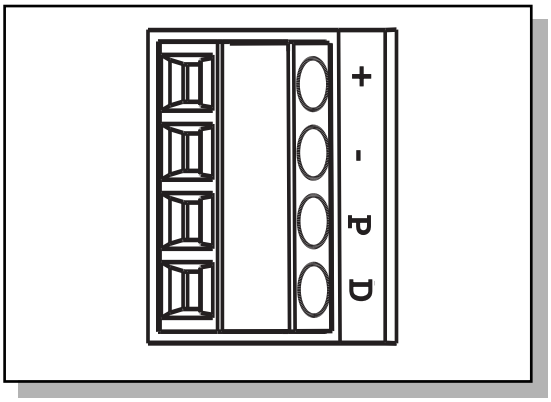

a) 2 wire connecting cable, Ø 4.2 mm, allocation of wire colors:
- Black earth connection (–)
- Blue volume impulse (P)

b) without connection cable (see figure)
+ no function
– earth connection
P volume impulse
D data connection, only for CF51 / CF55 / CF800

For electric connection see chapter 7.

6.2.1 Characteristic of impulse exit

• Version:	Open collector
• Polarity:	non reversible (observe connecting diagram)
• Duration of impulse:	135 ±35 ms
• Maximum input voltage:	30 V DC
• Max. input current:	27 mA
• Voltage drop when switched on:	≤ 0.3 V at 0.1 mA, ≤ 2.0 V at 27 mA
• Resistance when switched off:	⩾ 6 MΩ
• Maximum pulse frequency:	1 Hz

6.3 US Echo II power supply

Three types of power supply are available. As standard, a 6 year battery (Type 2x Li 3.6V-AA on an insert card) is installed. Optionally, variations with a 12 years battery (Type Li 3.6V-C on an insert card) or a mains module are available. Due to the modular system, changing of the battery may also be carried out on site (for this, the lid of the casing must be opened!).

6.3.1. Battery versions

- Use only original spare parts when changing the battery. Connect battery by using plug connector, Place battery into the corresponding recess in the PulsBox casing and engage in place.
- Do not recharge, open, heat to more than 100 °C, expose to an open flame or immerse in water.
- Dispose in accordance to local government regulations.

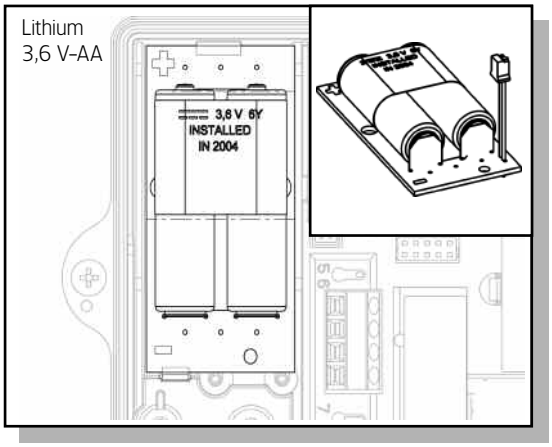

6.3.2 Mains versions

- Mains voltage 230V ±15% / 50 Hz ± 2%
- Maximum power requirement 1 VA
- Type of cable: 2 wires (no earth cable)
- Cable diameter 4.5 mm ... 7.0 mm
- Section of wire 0.5 mm Ø ... 2.5 mm Ø
- Heat meter with mains power supply must be connected according to installation instructions. The mains power supply must be protected against voltage failures. Protective systems (circuit breakers) must be used, in order to ensure secure disconnection of the unit from the mains in case of electric trouble (breaking current < 1 A).
  The connecting cable of the mains module must be connected directly to the on/off switch.
  An emergency circuit breaker should be:
  - installed within reach
  - clearly recognizable as an emergency breaker,
  - cut of both wires,
  - clearly show the on/off position.

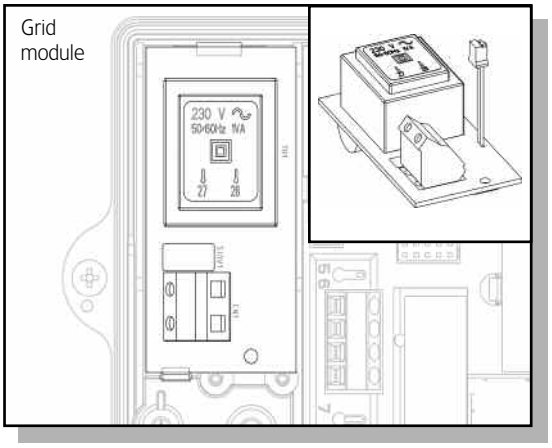

Start up of mains module:

- Switch off mains power (breaker switch).
- Open upper part of PulsBox casing.
- Only when retro fitting with a mains module: connect mains power supply to the meter using the plug and introduce main module into the corresponding recess in the casing.
- Pierce the third cable gland from the right and pull through mains cable.
- Clamp the cable using the tension relieving system.
- Connect wires to terminals No. 27 and 28 (safe guard against wrong polarity, strip 8mm of insulation).
- Set upper part of casing back on and screw tight.
- Connect power.
- Secure screws with user's lead seals (plastic or wire seals)

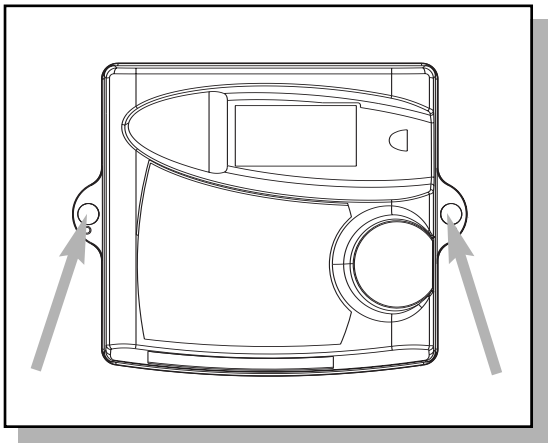

6.4. Start up

The US Echo II unit with PulsBox is now ready for start up. Perform function control (flow!) according to the mounting and operation instructions of the meter.

6.5. Mounting PulsBox

The PulsBox may be installed optionally directly at the flow meter, or on the wall by means of the supply wall support.

6.6. Mounting at the flow sensor

The PulsBox must not be installed with the flow meter, when environmental temperature is permanently above 55 °C or in case of operation for cooling purposes.

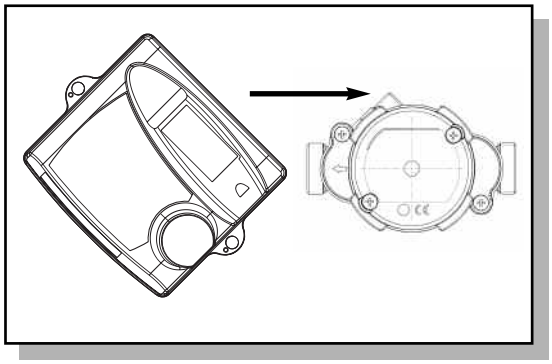

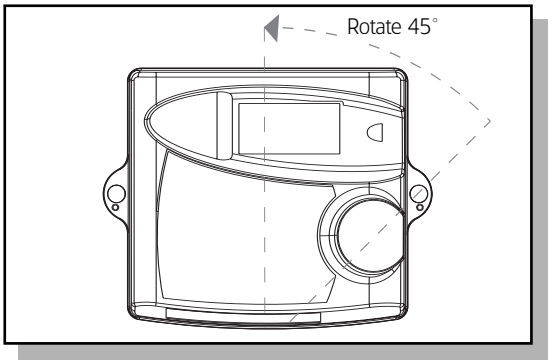

6.7. Wall mounting

If temperatures in the heating circuit are permanently higher than 90 °C, or if ambient temperature is higher than 55 °C, it is recommended to install the PulsBox on the wall.

Screw the supplied wall support to the wall or fasten it to a cool pipe.

Set PulsBox with an angle of 45° on the support.

Rotate PulsBox 45°, till it engages.

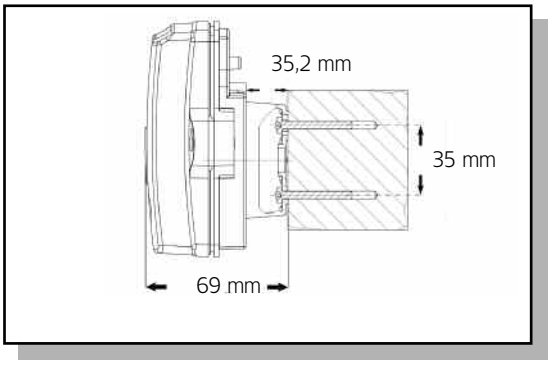

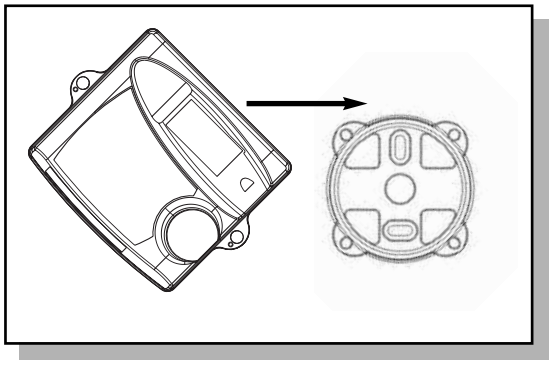

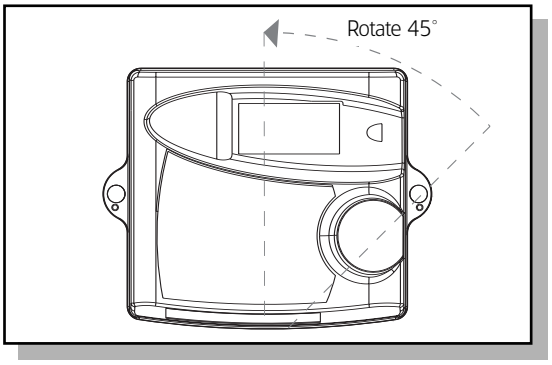

7. Upgrade the basic version of US Echo II with PulsBox

US Echo II flow meter may be upgraded on site with PulsBox. The following mounting steps must be taken into account for this procedure:

- Remove lateral casing screws of the PulsBox and the upper part of the casing
- All cables are introduced into the lower part of the casing through cable glands
- Cable glands are allocated according to cable diameters, according to the following recommendation:

Connecting cable	Cable diameter	Cable glands
With integrator	Ø 4.25 ±0.75 mm Alternative: Ø6±1 mm	① ⑥
With flow sensor	Ø 3.75 ±0.75 mm	⑧
Grid 230V	Ø 6±1 mm	③

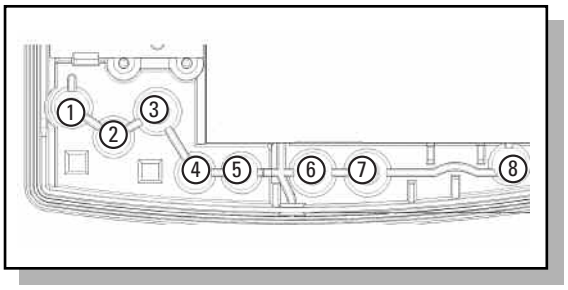

- Electric connection of meter and volume measuring parts to the connecting posts according to the fallowing figure
- Electric connection of power supply according to 6.2.2/6.2.3

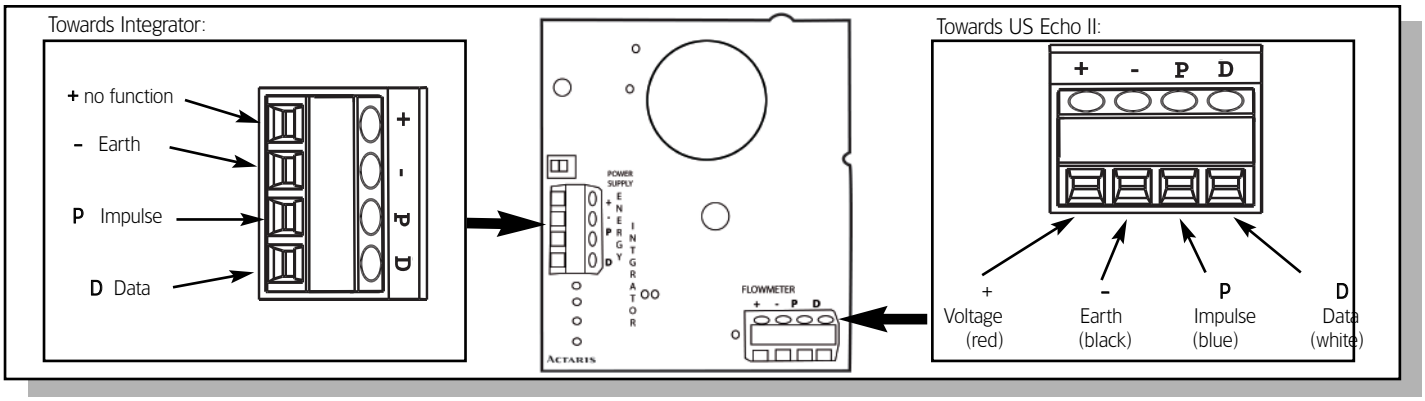

7.1. Start up

- Replace upper part of casing and screw on.
- Secure screws with user's lead seal (supplied plastic or wire seals).

US Echo II with PulsBox is now ready for start up.
Function control (flow) according to mounting and operating instructions of the meter.

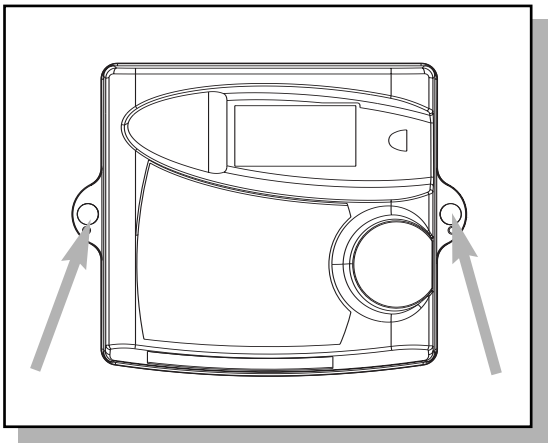

HE-0035.0-EN-12.07 © Actaris 2007 - Actaris reserves the right to change these specifications without prior notice.

Actaris
Allmess GmbH · Am Voßberg 11
23758 Oldenburg i.H. – Germany
For more information www.actaris.com
tel +49 43 61 62 50 00
fax +49 43 61 62 52 50